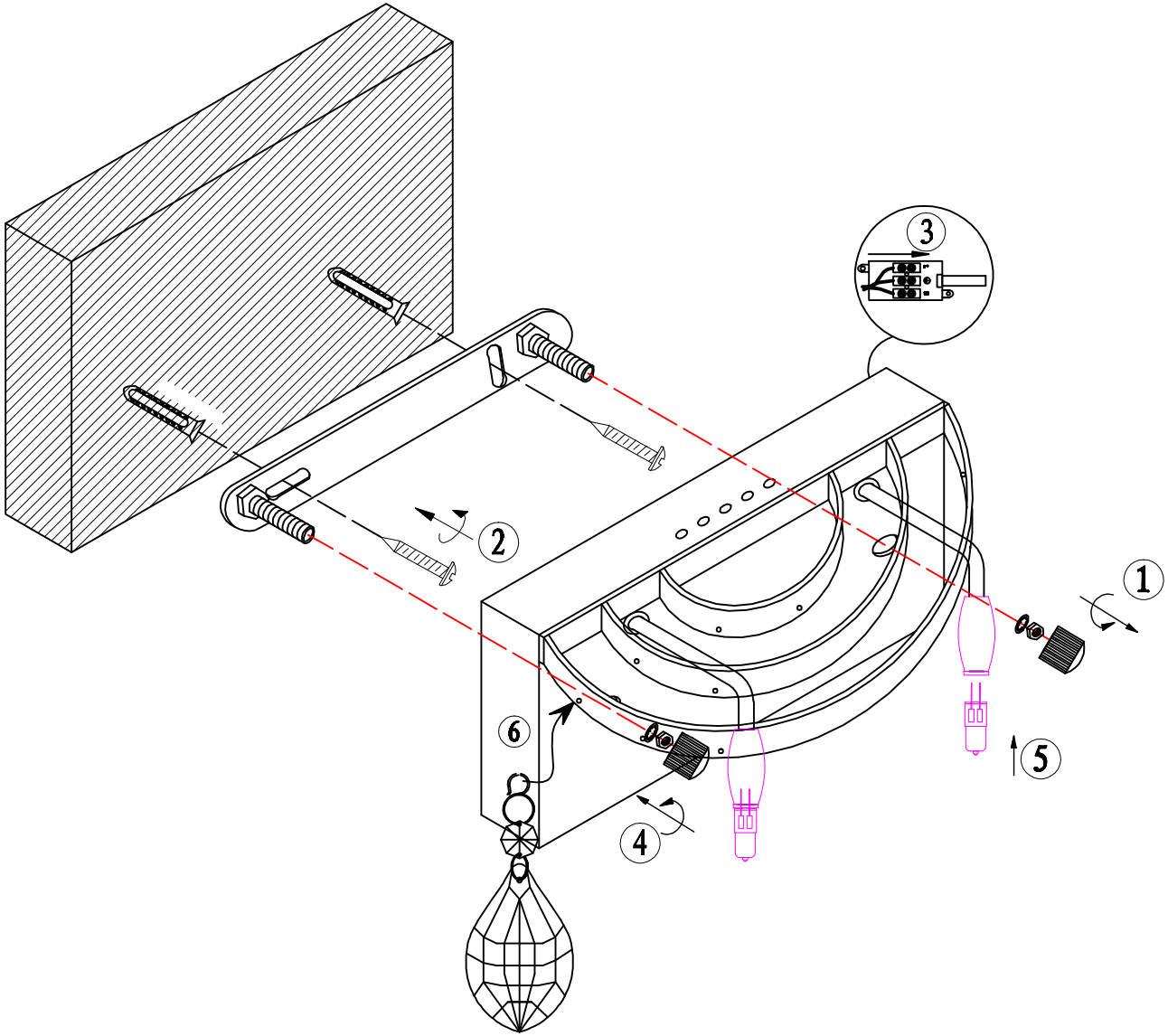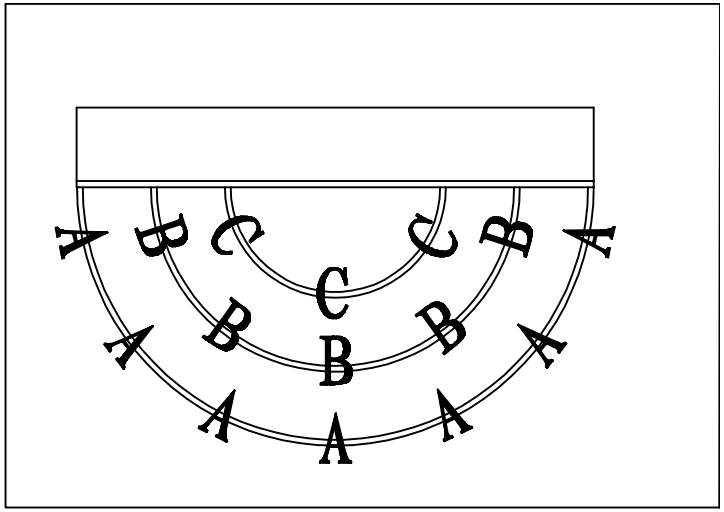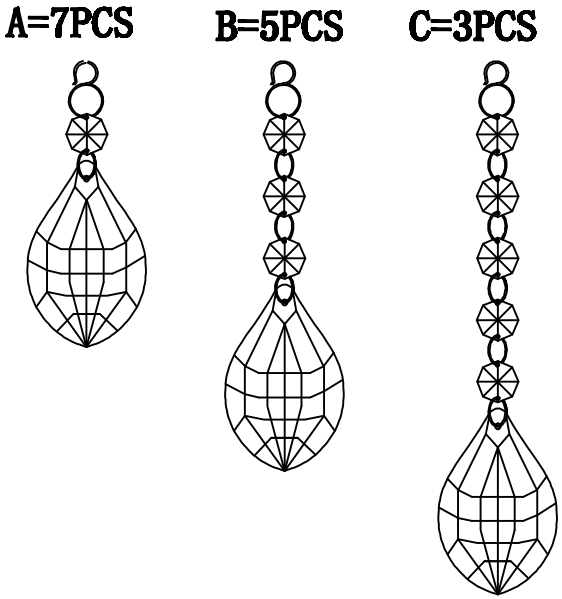W0063