Step1

Please make sure that mains is disconnected before proceeding!

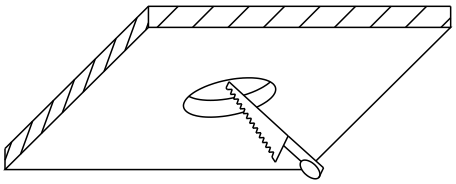

Drill a hole on the ceiling for the wire.

Step2

Please make sure that mains is disconnected before proceeding!

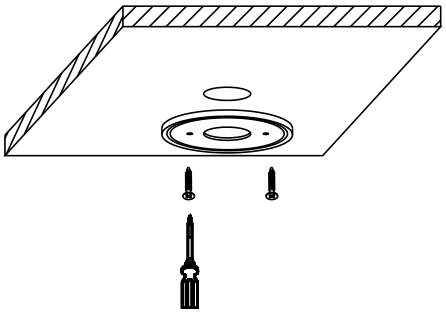

Fix the rear panel on the ceiling.

Step3

Please make sure that mains is disconnected before proceeding!

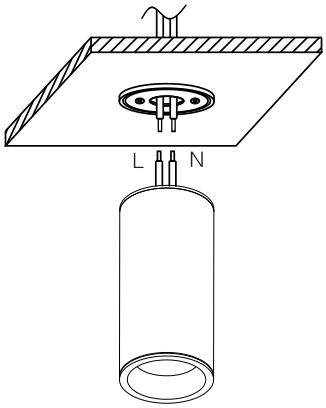

Connect the main power to Driver (L&N) input terminal.

Step4

Please make sure that mains is disconnected before proceeding!

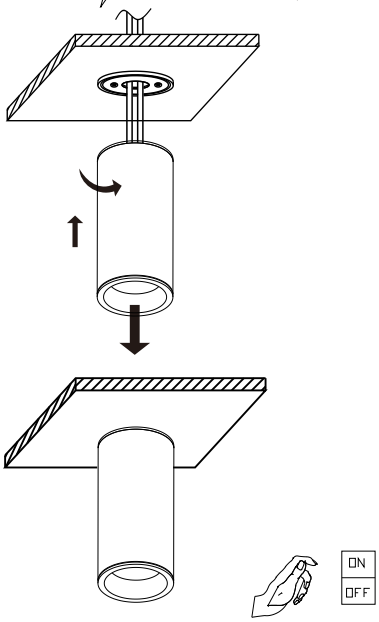

Fix the light on the rear panel through revolving.